| REVISION RECORD MODIFICATIONS | DATE | REV. |
|---|---|---|
| NEW | 2016/06/12 | A/0 |

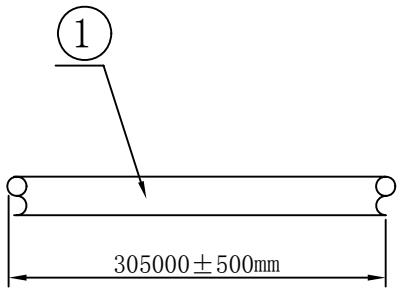


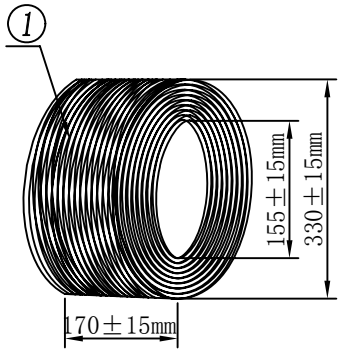


305M

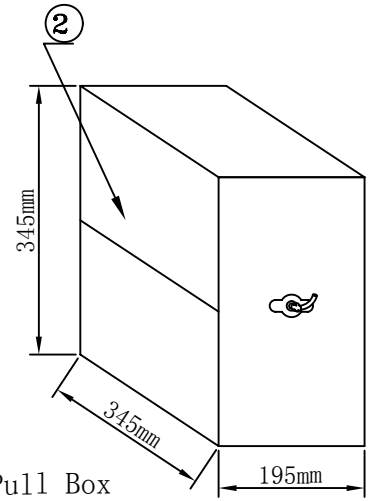


Pull Box

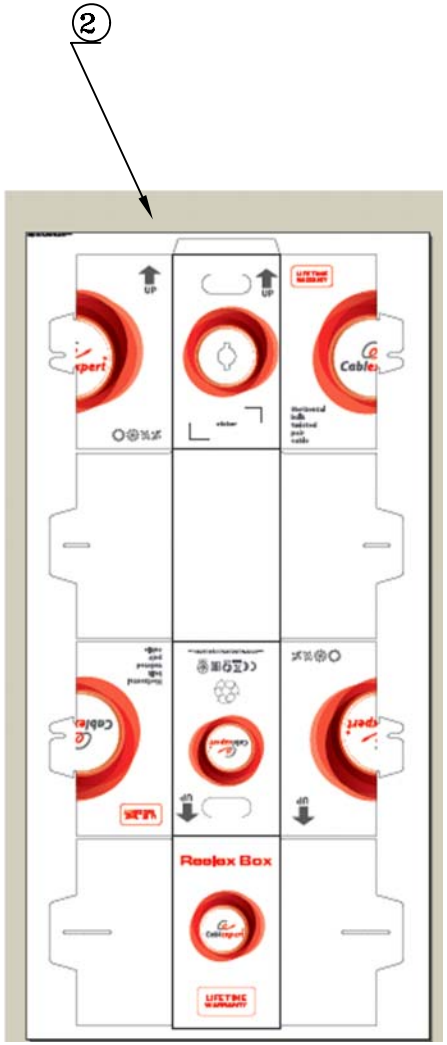


NOTES:

1. PACKING: ROLL/EASY-PULL BOX; NET WEIGHT:8.5KGS
2. PRINT WORD: UTP unshielded twisted 4 pairs enhanced category 5E cable (solid, BC) Cablexpert UPC-5004E-SO-LSZH PO23331 001M、、、002M、、、305M(PO Number will be varied as per different PO Number)

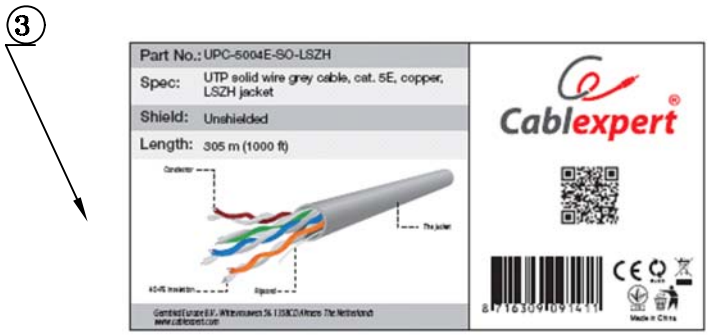


size: 160x80 mm

MATERIAL LIST:

| | | | | | | | | | |
|---|---|---|---|---|---|---|---|---|---|
| | | | | | DRAW NO. | | PRODUCT NAME | Cat.5e UTP Cable 305M | |
| ③ | LABEL | SIZE: 160*80mm | | | CUSTOMER | | | MAPE | tolerance |
| ② | PULL BOX | SIZE: 345*345*195mm | | | ITEM NO. | UPC-5004E-SO-LSZH | | | X. ±1.00 X.X ±0.50 |
| ① | CABLE | Cat.5e UTP (1/0.48BC*4P) OD:5.2±0.2mm JACKET:COLOR/GREY LSZH | | | APPROVED BY | CHECK BY | | DRAWN BY | UNTT MM |
| NO. | PARTS NAME | SPECIFICATION DESCRIPTION | QT'Y | REMARK | | | | East LI | Page 1/1 |